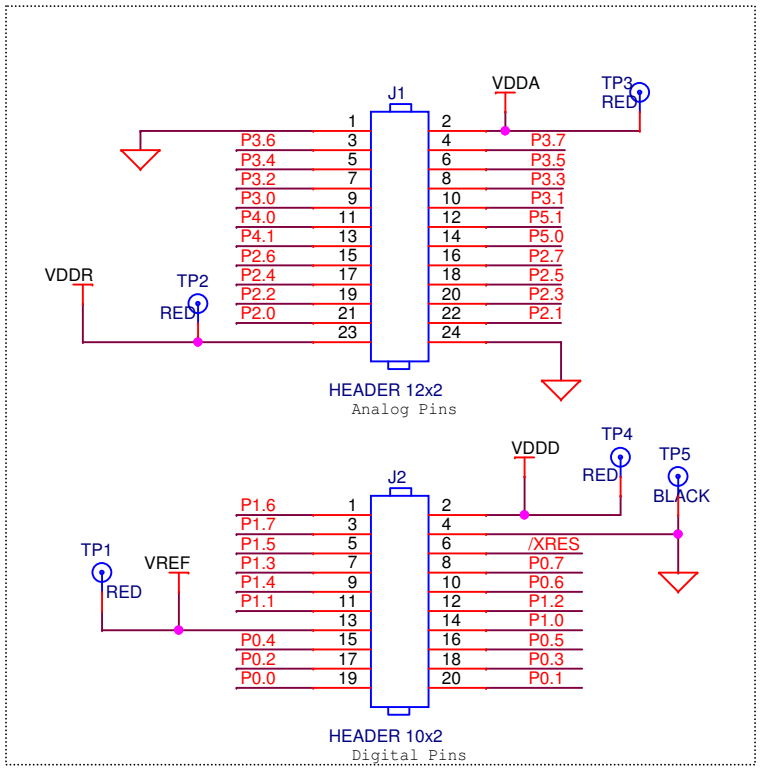

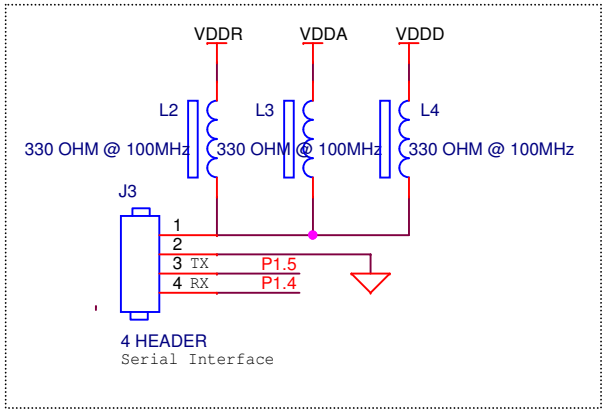

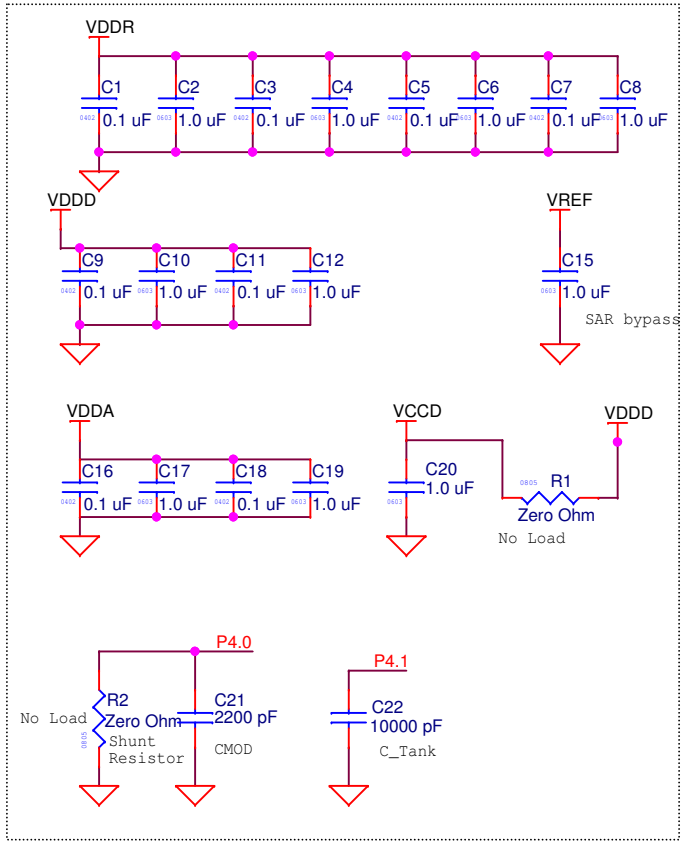

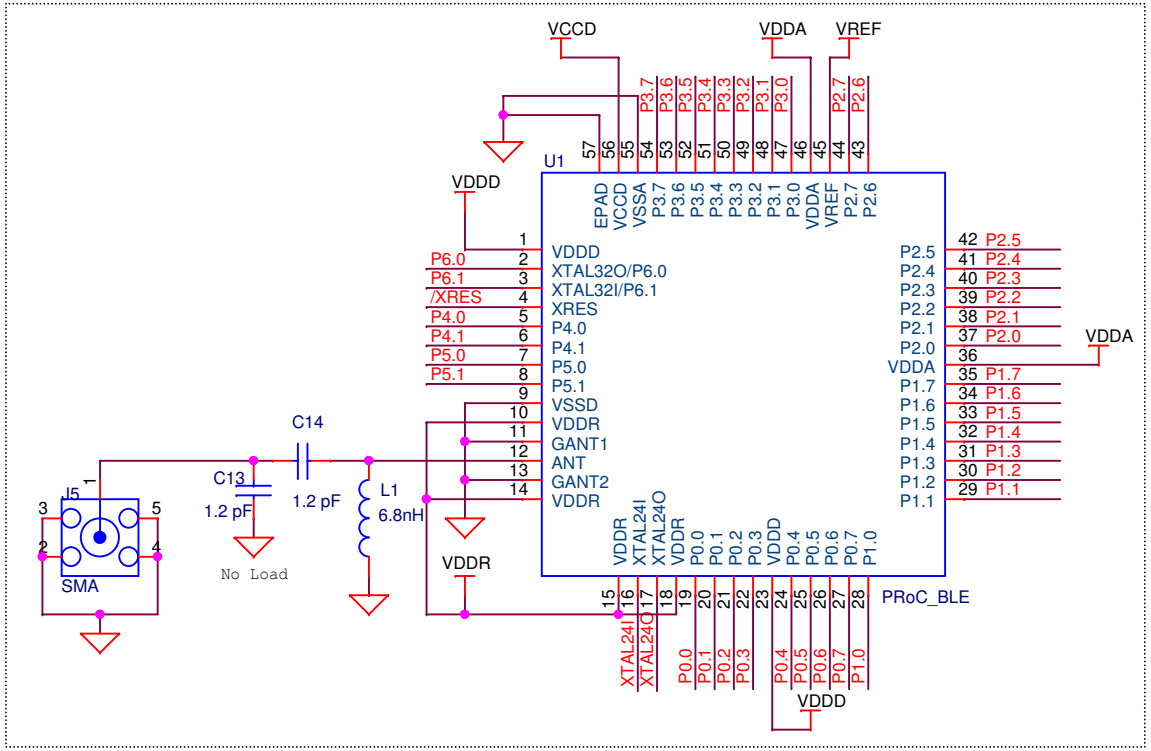

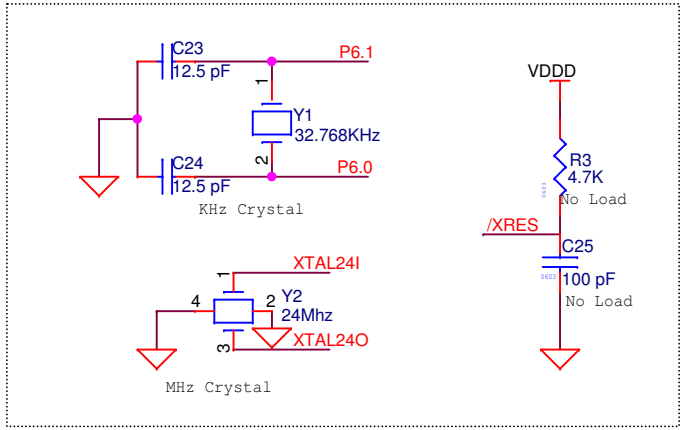

PCA: 121-60204-01
PCB: 600-60237-01
FAB DRW: 610-60227-01
ASSY DRW: 620-60235-01

CYPRESS SEMICONDUCTOR © 2014

Title: PRoC_BLE_SMA_MODULE_DESIGN		
Size: A4	Document Number: 630-60236-01	Rev: 01
Date: Tuesday, December 16, 2014	Sheet 1 of 8	